Work Order ID 92599

November-01-12 2:26:53 PM

92599

Item ID: 647.1610

Revision ID:

Item Name: Wiper Deflector, Fwd

Start Date: 01/11/2012 **Start Qty:** 6.00

Required Date: 15/11/2012 **Req'd Qty:** 6.00

Reference:

Accept *6* *6*

N900040100

Setup Start *NS1* Stop *NS2*

Cust Item ID:

Customer:

Run Start *NR1* Stop *NR2*

Approvals: **Process Plan:** ML5 **Date:** 12-11-01 **Tooling:** **Date:**

QC: **Date:** **SPC (Y/N):** **Date:**

Sequence ID/ Work Center ID	Operation Description	Set Up/ Run Hours	Tool ID	Tool #	Plan Code	Accept Qty	Reject Qty	Reject Number	Insp. Stamp
Draw Nbr: 647.7300	Revision Nbr: N/C								
100		0.00							
100 Bandsaw	BAND SAW								
Jeaspa Bandsaw	Memo: Cut Blank at 6.750"	0.00	ark 12/11/07			8		0	
110		0.00							
110 HAAS 1	HAAS CNC VERTICAL MACHINING #1		B.A 12/11/09			8	2	DAS 14 9-89	DAS 08 9-89
HAAS CNC vertical machine #1	Memo: 1-Machine per folio FB143 DWG REV: N/C FOLIO REV: AA	0.00	ark 12/11/10						

2- deburr and break all sharp edges

PTO-5 PTO-7

NCR: (Yes) / No

DQA: [signature] Date: 13/11/17

QA Closed: [initials] Date:

WORK ORDER NON-CONFORMANCE / UPDATE

Work Order: 95299

Part No. 647.1610

NCR No. 13-2221

DISPOSITION

Rework	[ ]
Scrap	[✓]
Use-as-is	[ ]
Work Order Update	[ ]

AGAINST DEPARTMENT/PROCESS

Skid-tube	[ ]	Crosstube	[ ]	Water Jet	[ ]	Engineering	[ ]
Machining	[✓]	Small Fab	[ ]	Prod. Eng. Coor.	[ ]	Quality	[ ]
Thermoforming	[ ]	Finishing	[ ]	Rec/Store/Packaging	[ ]	Other	[ ]
Large Fab	[ ]	Composite	[ ]	Supplier	[ ]		[ ]

Root Cause		Date	Step	Qty	Description of work order update or Non-conformance	Initial Chief Eng	Action Description	Sign & Date	Verification	QC Inspector
Doc/Data	X	12/11/09	110	1	→ The (2) ∅.406" counterbores are ∅.471" in the program	DAS 16 0-E-	→ changes have been done in program [initials] 12/11/09	[initials] 12/11/09	[initials] DAS 14 9-89 12/11/12	DAS 16 9-8-
Equip/Tooling			110	1	→ We analysed the dimension on the wireframe and it was ∅.471 but ∅.406 on the drawing.	057042 12/11/12	→ Scrap and replace	[initials] 12/11/09		12/11/12 057042
Operator					→ 1 part scrap		B 123418	DAS 08 9-89		
Material					RC wireframe not updated		see next page			
Setup										
Other										
Process										
Supplier										
Training										
Unapproved										

FAULT CATEGORY

Landing Gear

- [ ] Bending
- [ ] Centre Not Concentric to O/S
- [ ] Cracks
- [ ] Crushed/Crimped
- [ ] Cuffs
- [ ] Heat Treat
- [ ] Inspection Strip in Tube
- [ ] Ripples in Bend
- [ ] Torque Waves in Extrusion
- [ ] Turning Sequence
- [ ] Wave/Twist in Tube

General

- [ ] Bend
- [ ] BOM/Route
- [ ] Broken/Damaged
- [ ] Burrs
- [ ] Contamination
- [ ] Countersink
- [ ] Cut Too Short
- [ ] Drill Holes
- [ ] Drawing
- [ ] Finish
- [ ] Folio
- [ ] Grain
- [ ] Hardware
- [ ] Inspection Incomplete
- [ ] Instructions Incomplete/Unclear
- [ ] Maintenance
- [ ] Mislabeled
- [ ] Misread
- [ ] Offset
- [ ] Out of Calibration
- [ ] Out of Sequence
- [ ] Outside Dimensions
- [ ] Ovalized
- [ ] Over/Under tolerance
- [ ] Part Incorrect
- [ ] Part Lost/Missing
- [ ] Part Moved
- [ ] Positioned Wrong
- [ ] Power Loss/Surge
- [ ] Pressure/Forced
- [ ] Temperature/Cure
- [ ] Weld
- [ ] Wrong Stock Pulled
- [X] Other: Program.

190.16 x 2

$ 380.32

H:/FORMS/Quality Assurance\approved QA/NCRWO Rev G

Work Order ID 92599

November-01-12 2:26:53 PM

92599

Item ID: 647.1610

Revision ID:

Item Name: Wiper Deflector, Fwd

Start Date: 01/11/2012 **Start Qty:** 6.00 *6*

Required Date: 15/11/2012 **Req'd Qty:** 6.00 *6*

Reference:

Accept *N900040100*

Setup Start *NS1*

Stop *NS2*

Cust Item ID:

Customer:

Run Start *NR1*

Stop *NR2*

Approvals: **Process Plan:** _____ **Date:** _____ **Tooling:** _____ **Date:** _____

QC: _____ **Date:** _____ **SPC (Y/N):** _____ **Date:** _____

Sequence ID/ Work Center ID	Operation Description	Set Up/ Run Hours	Tool ID	Tool #	Plan Code	Accept Qty	Reject Qty	Reject Number	Insp. Stamp
120 *120* QC Quality Control	QC2- Inspect parts off machine FAI/FAIB	0.00				DAS 8 08 9-89			DAS 14 9-89 DAS 08 9-89
	Memo	0.00							
130 *130* QC Quality Control	QC8- Inspect parts - second check	0.00							
	Memo	0.00							
131 *131* HandFinish Hand Finishing		0.00							
	Memo	0.00							
	CLEAN AND REMOVE ALL PART MARKING								

Ba 12/11/09

ok 12/11/10

DAS 25 9-89 12-11-15

PTO

DQA: ________ Date: ____________

NCR: (Yes) / No

WORK ORDER NON-CONFORMANCE / UPDATE

QA Closed: Date:

Work Order: 92599

Part No. 647.1610

NCR No. ____________

DISPOSITION

Rework	[ ]
Scrap	[✓]
Use-as-is	[ ]
Work Order Update	[ ]

AGAINST DEPARTMENT/PROCESS

Skid-tube	[ ]	Crosstube	[ ]	Water Jet	[ ]	Engineering	[ ]
Machining	[X]	Small Fab	[ ]	Prod. Eng. Coor.	[ ]	Quality	[ ]
Thermoforming	[ ]	Finishing	[ ]	Rec/Store/Packaging	[ ]	Other	[ ]
Large Fab	[ ]	Composite	[ ]	Supplier	[ ]		[ ]

Root Cause		Date	Step	Qty	Description of work order update or Non-conformance	Initial Chief Eng	Action Description	Sign & Date	Verification	QC Inspector
Doc/Data	[ ]	12/11/10	110	1	the mesure for the hole are off by .100" R.L. forgot to move the half of edge finder.	DAS 16 Q72042 12/11/12	scrap and destroy replace B 123418	DAS 14 12/11/10	D.A 12/01/10	DAS 16 Q72042 12/11/12
Equip/Tooling	[ ]									
Operator	[✓]									
Material	[ ]									
Setup	[ ]									
Other	[ ]									
Process	[ ]									
Supplier	[ ]									
Training	[ ]									
Unapproved	[ ]									

see previous page

FAULT CATEGORY

Landing Gear

- [ ] Bending
- [ ] Centre Not Concentric to O/S
- [ ] Cracks
- [ ] Crushed/Crimped.
- [ ] Cuffs
- [ ] Heat Treat
- [ ] Inspection Strip in Tube
- [ ] Ripples in Bend
- [ ] Torque Waves in Extrusion
- [ ] Turning Sequence
- [ ] Wave/Twist in Tube

General

- [ ] Bend
- [ ] BOM/Route
- [ ] Broken/Damaged
- [ ] Burrs
- [ ] Contamination
- [ ] Countersink
- [ ] Cut Too Short
- [ ] Drill Holes
- [ ] Drawing
- [ ] Finish
- [ ] Folio
- [ ] Grain
- [ ] Hardware
- [ ] Inspection Incomplete
- [ ] Instructions Incomplete/Unclear
- [ ] Maintenance
- [ ] Mislabeled
- [X] Misread
- [ ] Offset
- [ ] Out of Calibration
- [ ] Out of Sequence
- [✓] Outside Dimensions
- [ ] Ovalized
- [ ] Over/Under tolerance
- [ ] Part Incorrect
- [ ] Part Lost/Missing
- [ ] Part Moved
- [ ] Positioned Wrong
- [ ] Power Loss/Surge
- [ ] Pressure/Forced
- [ ] Temperature/Cure
- [ ] Weld
- [ ] Wrong Stock Pulled
- [X] Other

MISSREAD set up instructy

H:/FORMS/Quality Assurance\approved QA/NCRWO Rev G

Work Order ID 92599

November-01-12 2:26:53 PM

92599

Item ID: 647.1610

Revision ID:

Item Name: Wiper Deflector, Fwd

Accept *N900040100*

Setup Start *NS1*

Stop *NS2*

Start Date: 01/11/2012 **Start Qty:** 6.00 *6*

Required Date: 15/11/2012 **Req'd Qty:** 6.00 *6*

Reference:

Cust Item ID:

Customer:

Approvals: **Process Plan:** _____ **Date:** _____ **Tooling:** _____ **Date:** _____

QC: _____ **Date:** _____ **SPC (Y/N):** _____ **Date:** _____

Run Start *NR1*

Stop *NR2*

Sequence ID/ Work Center ID	Operation Description	Set Up/ Run Hours	Tool ID	Tool #	Plan Code	Accept Qty	Reject Qty	Reject Number	Insp. Stamp
140	Outsource process-Anodize per QSI017 4.1.10.1	0.00							
140 Outsource4									
Outsource process - Anodize	**Memo** Issue P/O: 92599 Black Anodize as per Dwg 647.1610	0.00							12-11-26
150	Receive & Inspect for Damage & Mat'l Certs	0.00							
150 Packaging									
Packaging	**Memo**	0.00							01-24-12/18 (8)
155	QC5- Inspect part completeness to step on W/O	0.00							
155 QC						8			
Quality Control	**Memo**	0.00							DAS 05 8-89 13-01-06

DQA: _____ Date: _____

NCR: Yes / No

WORK ORDER NON-CONFORMANCE / UPDATE

QA Closed: Date:

Work Order: _____

Part No. _____

NCR No. _____

DISPOSITION

- Rework ☐
- Scrap ☐
- Use-as-is ☐
- Work Order Update ☐

AGAINST DEPARTMENT/PROCESS

Skid-tube ☐	Crosstube ☐	Water Jet ☐	Engineering ☐
Machining ☐	Small Fab ☐	Prod. Eng. Coor. ☐	Quality ☐
Thermoforming ☐	Finishing ☐	Rec/Store/Packaging ☐	Other ☐
Large Fab ☐	Composite ☐	Supplier ☐	☐

Root Cause		Date	Step	Qty	Description of work order update or Non-conformance	Initial Chief Eng	Action Description	Sign & Date	Verification	QC Inspector
Doc/Data	☐									
Equip/Tooling	☐									
Operator	☐									
Material	☐									
Setup	☐									
Other	☐									
Process	☐									
Supplier	☐									
Training	☐									
Unapproved	☐									

FAULT CATEGORY

Landing Gear

- ☐ Bending
- ☐ Centre Not Concentric to O/S
- ☐ Cracks
- ☐ Crushed/Crimped.
- ☐ Cuffs
- ☐ Heat Treat
- ☐ Inspection Strip in Tube
- ☐ Ripples in Bend
- ☐ Torque Waves in Extrusion
- ☐ Turning Sequence
- ☐ Wave/Twist in Tube

General

- ☐ Bend
- ☐ BOM/Route
- ☐ Broken/Damaged
- ☐ Burrs
- ☐ Contamination
- ☐ Countersink
- ☐ Cut Too Short
- ☐ Drill Holes
- ☐ Drawing
- ☐ Finish
- ☐ Folio
- ☐ Grain
- ☐ Hardware
- ☐ Inspection Incomplete
- ☐ Instructions Incomplete/Unclear
- ☐ Maintenance
- ☐ Mislabeled
- ☐ Misread
- ☐ Offset
- ☐ Out of Calibration
- ☐ Out of Sequence
- ☐ Outside Dimensions
- ☐ Ovalized
- ☐ Over/Under tolerance
- ☐ Part Incorrect
- ☐ Part Lost/Missing
- ☐ Part Moved
- ☐ Positioned Wrong
- ☐ Power Loss/Surge
- ☐ Pressure/Forced
- ☐ Temperature/Cure
- ☐ Weld
- ☐ Wrong Stock Pulled
- ☐ Other

_____

_____

_____

Work Order ID 92599

November-01-12 2:26:53 PM

92599

Item ID: 647.1610
Revision ID:
Item Name: Wiper Deflector, Fwd

Accept *N900040100*

Setup Start *NS1*
Stop *NS2*

Start Date: 01/11/2012 **Start Qty:** 6.00 *6*
Required Date: 15/11/2012 **Req'd Qty:** 6.00 *6*
Reference:

Cust Item ID:
Customer:

Run Start *NR1*
Stop *NR2*

Approvals: **Process Plan:** _____ **Date:** _____ **Tooling:** _____ **Date:** _____
QC: _____ **Date:** _____ **SPC (Y/N):** _____ **Date:** _____

Sequence ID/ Work Center ID	Operation Description	Set Up/ Run Hours	Tool ID	Tool #	Plan Code	Accept Qty	Reject Qty	Reject Number	Insp. Stamp
160 *160* SprayPaint Spray Painting	Spray Painting per QSI005 4.2	0.00				8	Ø	Ø	AB 13-1-9
	Memo PRIME AS PER DWG, SEE NOTE #3 BATCH: 123693	0.00							
170 *170* QC Quality Control	QC14- Inspect Spray Paint	0.00				8			DAS 05 9-89 13-01-10
	Memo	0.00							
180 *180* Packaging Packaging	Identify as per dwg & Stock Location: ST438	0.00				8x			SP 13-01-14.
	Memo ***IDENTIFY AS PER APICAL MPP-120 BY STAMPING P# AND REV***	0.00							

DQA: _____ Date: _____

NCR: Yes / No

WORK ORDER NON-CONFORMANCE / UPDATE

QA Closed: Date:

Work Order: _____

Part No. _____

NCR No. _____

DISPOSITION

- Rework ☐
- Scrap ☐
- Use-as-is ☐
- Work Order Update ☐

AGAINST DEPARTMENT/PROCESS

Skid-tube ☐	Crosstube ☐	Water Jet ☐	Engineering ☐
Machining ☐	Small Fab ☐	Prod. Eng. Coor. ☐	Quality ☐
Thermoforming ☐	Finishing ☐	Rec/Store/Packaging ☐	Other ☐
Large Fab ☐	Composite ☐	Supplier ☐	☐

Root Cause		Date	Step	Qty	Description of work order update or Non-conformance	Initial Chief Eng	Action Description	Sign & Date	Verification	QC Inspector
Doc/Data	☐									
Equip/Tooling	☐									
Operator	☐									
Material	☐									
Setup	☐									
Other	☐									
Process	☐									
Supplier	☐									
Training	☐									
Unapproved	☐									

FAULT CATEGORY

Landing Gear		General				
☐ Bending	☐ Bend	☐ Grain	☐ Ovalized	☐ Pressure/Forced
☐ Centre Not Concentric to O/S	☐ BOM/Route	☐ Hardware	☐ Over/Under tolerance	☐ Temperature/Cure
☐ Cracks	☐ Broken/Damaged	☐ Inspection Incomplete	☐ Part Incorrect	☐ Weld
☐ Crushed/Crimped.	☐ Burrs	☐ Instructions Incomplete/Unclear	☐ Part Lost/Missing	☐ Wrong Stock Pulled
☐ Cuffs	☐ Contamination	☐ Maintenance	☐ Part Moved	
☐ Heat Treat	☐ Countersink	☐ Mislabeled	☐ Positioned Wrong	
☐ Inspection Strip in Tube	☐ Cut Too Short	☐ Misread	☐ Power Loss/Surge	☐ Other
☐ Ripples in Bend	☐ Drill Holes	☐ Offset		
☐ Torque Waves in Extrusion	☐ Drawing	☐ Out of Calibration		
☐ Turning Sequence	☐ Finish	☐ Out of Sequence		
☐ Wave/Twist in Tube	☐ Folio	☐ Outside Dimensions		

Work Order ID 92599

November-01-12 2:26:53 PM

92599

Item ID: 647.1610

Revision ID:

Item Name: Wiper Deflector, Fwd

Start Date: 01/11/2012 **Start Qty:** 6.00 *6*

Required Date: 15/11/2012 **Req'd Qty:** 6.00 *6*

Reference:

Accept *N900040100*

Setup Start *NS1*

Stop *NS2*

Cust Item ID:

Customer:

Approvals: **Process Plan:** _____ **Date:** _____ **Tooling:** _____ **Date:** _____

QC: _____ **Date:** _____ **SPC (Y/N):** _____ **Date:** _____

Run Start *NR1*

Stop *NR2*

Sequence ID/ Work Center ID	Operation Description	Set Up/ Run Hours	Tool ID	Tool #	Plan Code	Accept Qty	Reject Qty	Reject Number	Insp. Stamp
190	QC21- Final Inspection - Work Order Release	0.00					13/1/15		
190 QC Quality Control	Memo	0.00							

pd 13-01-14

DQA: _____ Date: _____

NCR: Yes / No

WORK ORDER NON-CONFORMANCE / UPDATE

QA Closed: Date:

Work Order: _____

Part No. _____

NCR No. _____

DISPOSITION

- Rework ☐
- Scrap ☐
- Use-as-is ☐
- Work Order Update ☐

AGAINST DEPARTMENT/PROCESS

Skid-tube ☐	Crosstube ☐	Water Jet ☐	Engineering ☐
Machining ☐	Small Fab ☐	Prod. Eng. Coor. ☐	Quality ☐
Thermoforming ☐	Finishing ☐	Rec/Store/Packaging ☐	Other ☐
Large Fab ☐	Composite ☐	Supplier ☐	☐

Root Cause		Date	Step	Qty	Description of work order update or Non-conformance	Initial Chief Eng	Action Description	Sign & Date	Verification	QC Inspector
Doc/Data	☐									
Equip/Tooling	☐									
Operator	☐									
Material	☐									
Setup	☐									
Other	☐									
Process	☐									
Supplier	☐									
Training	☐									
Unapproved	☐									

FAULT CATEGORY

Landing Gear

- ☐ Bending
- ☐ Centre Not Concentric to O/S
- ☐ Cracks
- ☐ Crushed/Crimped
- ☐ Cuffs
- ☐ Heat Treat
- ☐ Inspection Strip in Tube
- ☐ Ripples in Bend
- ☐ Torque Waves in Extrusion
- ☐ Turning Sequence
- ☐ Wave/Twist in Tube

General

- ☐ Bend
- ☐ BOM/Route
- ☐ Broken/Damaged
- ☐ Burrs
- ☐ Contamination
- ☐ Countersink
- ☐ Cut Too Short
- ☐ Drill Holes
- ☐ Drawing
- ☐ Finish
- ☐ Folio
- ☐ Grain
- ☐ Hardware
- ☐ Inspection Incomplete
- ☐ Instructions Incomplete/Unclear
- ☐ Maintenance
- ☐ Mislabeled
- ☐ Misread
- ☐ Offset
- ☐ Out of Calibration
- ☐ Out of Sequence
- ☐ Outside Dimensions
- ☐ Ovalized
- ☐ Over/Under tolerance
- ☐ Part Incorrect
- ☐ Part Lost/Missing
- ☐ Part Moved
- ☐ Positioned Wrong
- ☐ Power Loss/Surge
- ☐ Pressure/Forced
- ☐ Temperature/Cure
- ☐ Weld
- ☐ Wrong Stock Pulled
- ☐ Other

_____

_____

_____

Picklist Print

November-01-12 2:26:57 PM

Work Order ID: 92599

92599

Parent Item: 647.1610

647 1610

Parent Item Name: Wiper Deflector, Fwd

Start Date: 01/11/2012 **Required Date:** 15/11/2012

Start Qty: 6.00 **Required Qty:** 6.00

Comments: IPP REV:A NEW ISSUE 12/11/01 JFS VERIFY BY: JLM

Component Item ID/ Item Name	Replacement Item ID	Mfg/ Purch	Bin Item	Primary Location	Last Location	Route Seq ID	Unit of Measure	Qty on Hand	Qty per Kit	Total Qty	Qty Issued	Date Issued	Status
M7075T6B1.750X02.250		Purchased	No			100	f	8.0800	0.563	3.555789			

M7075T6B1.750X02.250

7075-T6 BAR 1.750" X 2.250"

**

Location	Loc Qty	Loc Code
MAT008	8.08	
123418	8.08	

4.73 OK 12/11/07

DQA: _____ Date: _____

NCR: Yes / No

WORK ORDER NON-CONFORMANCE / UPDATE

QA Closed: Date:

Work Order: _____

Part No. _____

NCR No. _____

DISPOSITION

- Rework ☐
- Scrap ☐
- Use-as-is ☐
- Work Order Update ☐

AGAINST DEPARTMENT/PROCESS

Skid-tube ☐	Crosstube ☐	Water Jet ☐	Engineering ☐
Machining ☐	Small Fab ☐	Prod. Eng. Coor. ☐	Quality ☐
Thermoforming ☐	Finishing ☐	Rec/Store/Packaging ☐	Other ☐
Large Fab ☐	Composite ☐	Supplier ☐	☐

Root Cause		Date	Step	Qty	Description of work order update or Non-conformance	Initial Chief Eng	Action Description	Sign & Date	Verification	QC Inspector
Doc/Data	☐									
Equip/Tooling	☐									
Operator	☐									
Material	☐									
Setup	☐									
Other	☐									
Process	☐									
Supplier	☐									
Training	☐									
Unapproved	☐									

FAULT CATEGORY

Landing Gear

- ☐ Bending
- ☐ Centre Not Concentric to O/S
- ☐ Cracks
- ☐ Crushed/Crimped
- ☐ Cuffs
- ☐ Heat Treat
- ☐ Inspection Strip in Tube
- ☐ Ripples in Bend
- ☐ Torque Waves in Extrusion
- ☐ Turning Sequence
- ☐ Wave/Twist in Tube

General

- ☐ Bend
- ☐ BOM/Route
- ☐ Broken/Damaged
- ☐ Burrs
- ☐ Contamination
- ☐ Countersink
- ☐ Cut Too Short
- ☐ Drill Holes
- ☐ Drawing
- ☐ Finish
- ☐ Folio
- ☐ Grain
- ☐ Hardware
- ☐ Inspection Incomplete
- ☐ Instructions Incomplete/Unclear
- ☐ Maintenance
- ☐ Mislabeled
- ☐ Misread
- ☐ Offset
- ☐ Out of Calibration
- ☐ Out of Sequence
- ☐ Outside Dimensions
- ☐ Ovalized
- ☐ Over/Under tolerance
- ☐ Part Incorrect
- ☐ Part Lost/Missing
- ☐ Part Moved
- ☐ Positioned Wrong
- ☐ Power Loss/Surge
- ☐ Pressure/Forced
- ☐ Temperature/Cure
- ☐ Weld
- ☐ Wrong Stock Pulled
- ☐ Other

_____

_____

_____

DART AEROSPACE LTD	Work Order:	92599
Description: WIPER DEFLECTOR, FUID	Part Number:	647.1610
Inspection Dwg: 647.1600 Rev: N/C		Page 1 of 1

FIRST ARTICLE INSPECTION CHECKLIST

Drawing Dimension	Tolerance	Actual Dimension	Accept	Reject	Method of Inspection	Comments
2.00	+/- .010	1.999	✓		Vern	GA-01
2.02	+/- .010	2.026	✓		H-6	31006
R0.20	+/- .010	R0.190	✓		R-6	ref.
0.28	+/- .010	0.276	✓		Vern	GA-01
0.86	+/- .010	0.858	✓		H-6	31006
0.44	+/- .010	0.440	✓		Vern	GA-01
0.72	+/- .010	0.720	✓		H-6	31006
4.77	+/- .010	4.767	✓		"	
1.14	+/- .010	1.140	✓		"	
0.86	+/- .010	0.859	✓		"	
0.40	+/- .010	0.400	✓		"	
1.20	+/- .010	1.200	✓		"	
136°	+/- .5°	136°	✓		C-square	MLL - CBB
6.46	+/- .010	6.457	✓		H-6	31006
3.85	+/- .010	3.850	✓		"	
0.63	+/- .010	0.630	✓		"	
0.94	+/- .010	0.943	✓		"	
1.145	+/- .005	1.140	✓		"	
0.25	+/- .010	0.251	✓		Mic (CNC)	118-120
20°	+/- .5°	20°	✓		C-square	
ϕ0.25	+/- .010	ϕ 0.250	✓		R-6	ref.
ϕ0.50	+/- .010	ϕ 0.500	✓		"	"
40.7°	+/- .5°	40.7°	✓		C-square	ML-CBB

Measured by:	DAS 08	Audited by:	DAS 25	Preliminary Approval:	
Date:	12/11/09	Date:	12-11-15	Date:	

Rev	Date	Change	Revised by	Approved
E	10.04.14	Added preliminary approval	KJ	

10.04.15

DART AEROSPACE LTD	Work Order:	92599
Description: WIPER DEFLECTOR, FWD	Part Number:	647.1610
Inspection Dwg: 647.1600 Rev: N/C		Page 1 of 1

FIRST ARTICLE INSPECTION CHECKLIST

Drawing Dimension	Tolerance	Actual Dimension	Accept	Reject	Method of Inspection	Comments
18.2°	+/- .5°	18.2°	✓		C-square	ML-CBB
4.74	+/- .010	4.737	✓		H-G	31006
ø0.201	+.005/-.001	ø0.201	✓		Vern	GA-01
3°	+/- .5°	3°	✓		C-square	ML-CBB
ø.201	±.005 .001	ø.201	✓		Vern	ML-06
ø.406	±.005 .001	ø.406	✓		Vern	ML-06
.133	±.005					

Measured by:	DAS 08 8-89
Date:	12/11/09

Audited by:	
Date:	

Preliminary Approval:	
Date:	

Rev	Date	Change	Revised by	Approved
E	10.04.14	Added preliminary approval	KJ	

10.04.15

NOTES:

1. (△1) MATERIAL: ALUMINUM 7075-T651 AMS-QQ-A-250/12
2. (△2) MATERIAL: ALUMINUM 2024-T3 PER AMS-QQ-A-250/4
3. (△3) FINISH: HARD ANODIZE IAW MIL-A-8625 TYPE III, CLASS 2, COLOR BLACK; CARDINAL 4860-50 PRETREATMENT PRIMER PRIME IAW MIL-P-23377J TYPE I CLASS N
4. DEBURR AND BREAK ALL SHARP EDGES
5. IDENTIFY IAW MPP-120

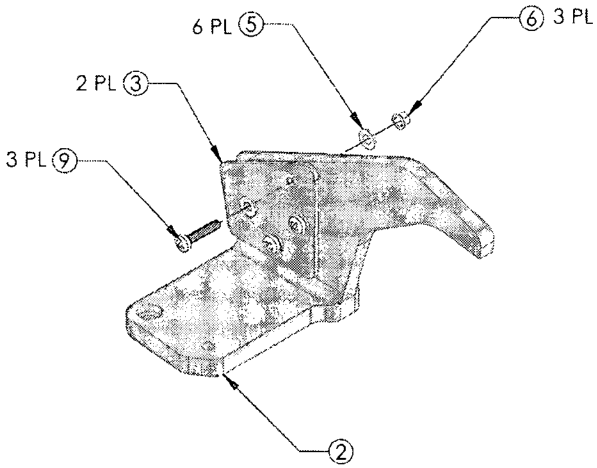

647.1601 SHOWN EXPLODED

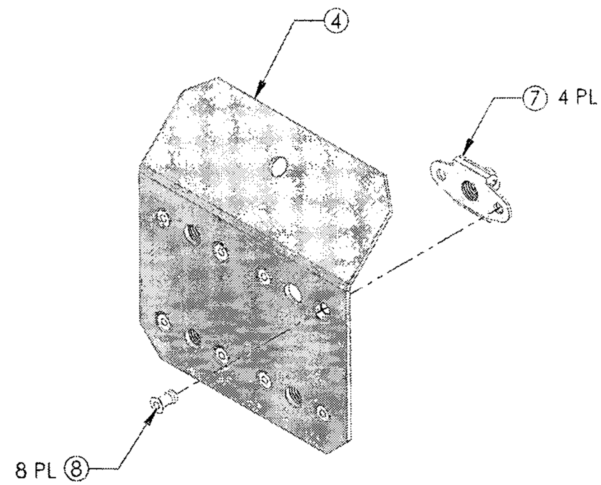

647.1602 SHOWN EXPLODED

SHOP COPY
RETURN TO
ENGINEERING
UNCONTROLLED COPY
SUBJECT TO AMENDMENT
WITHOUT NOTICE
WORK ORDER
NO. 92599 MCJ
12-11-01

		3	9	601.2989	SCREW	MS27039-0812	
	8		8	601.2980	NUTPLATE RIVET	CCR264SS-3-04	
	4		7	601.1900	NUTPLATE	MS21059-3	
		3	6	601.2973	LOCKNUT	MS21042-05	
		6	5	601.2764	WASHER	NAS1149FN832P	
	1		4	647.1613	DOUBLER	△2	△3
		2	3	647.1612	SPLICE PLATE	△2	△3
		1	2	647.1611	WIPER DEFLECTOR, AFT	△1	△3
			1	647.1610	WIPER DEFLECTOR, FWD	△1	△3
	X			647.1602	DOUBLER ASSY		
		X		647.1601	WIPER DEFLECTOR ASSY, AFT		
	.1602	.1601	FIND #	PART #	DESCRIPTION	MAT'L	SPEC.
QTY			PARTS LIST				

NEXT ASSY (S): 647.1300

ORIGINAL DATE (MO-DA-YR): 06-10-09
DRAWN BY: J. GARDNER | CHECKER: P. BRAVO
DRAWING APPROVAL: P. BRAVO 06-10-09
CONTRACT NO

UNLESS OTHERWISE SPECIFIED DIMENSIONS ARE IN INCHES
TOLERANCES ARE:
2 PLACE DECIMALS ±.01
3 PLACE DECIMALS ±.006
ANGLES ± .5°

APICAL INDUSTRIES
2608 TEMPLE HEIGHTS DR.
OCEANSIDE, CA. 92056-3512 (760)724-5300

WIPER DEFLECTOR ASSY

SIZE	CAGE CODE	DWG. NO	REV
B	07MZ6	647.1600	N/C

SCALE NONE | SHEET 1 OF 6

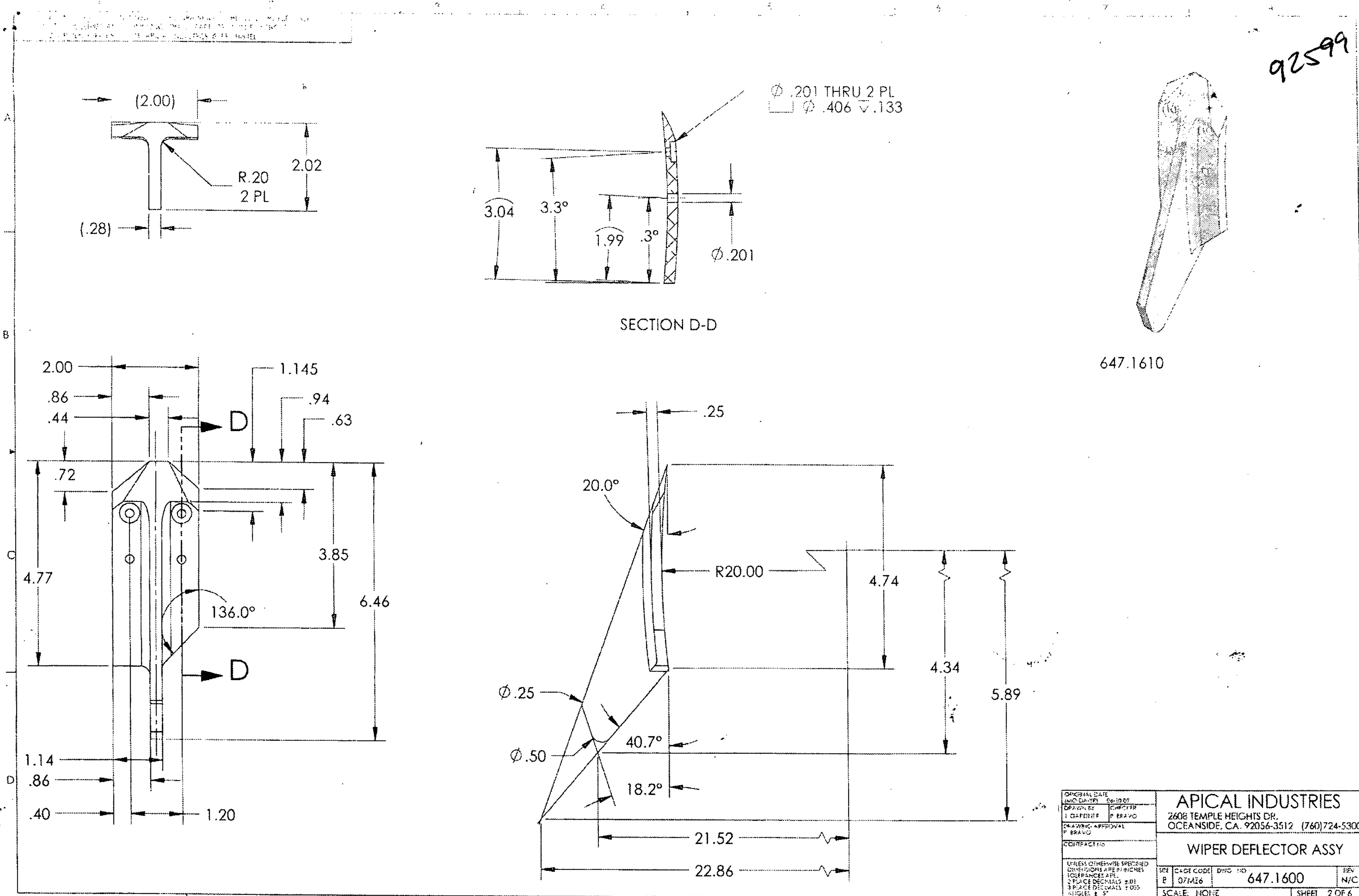
92599
(2.00)
R.20
2 PL
2.02
(.28)
⌀ .201 THRU 2 PL
⌴ ⌀ .406 ↧ .133
3.04
3.3°
1.99
.3°
⌀.201
SECTION D-D
647.1610
2.00
1.145
.86
.94
.44
.63
D
.72
4.77
3.85
6.46
136.0°
D
1.14
.86
.40
1.20
.25
20.0°
R20.00
4.74
4.34
5.89
⌀.25
⌀.50
40.7°
18.2°
21.52
22.86
ORIGINAL DATE (MO-DA-YR) 06-10-07
DRAWN BY I GARDNER
CHECKED P BRAVO
DRAWING APPROVAL P BRAVO
CONTRACT NO
UNLESS OTHERWISE SPECIFIED DIMENSIONS ARE IN INCHES TOLERANCES ARE:
2 PLACE DECIMALS ±.01
3 PLACE DECIMALS ±.005
ANGLES ± .5°
APICAL INDUSTRIES
2608 TEMPLE HEIGHTS DR.
OCEANSIDE, CA. 92056-3512 (760)724-5300
WIPER DEFLECTOR ASSY
SIZE B
CAGE CODE 07MZ6
DWG NO 647.1600
REV N/C
SCALE: NONE
SHEET 2 OF 6

92599

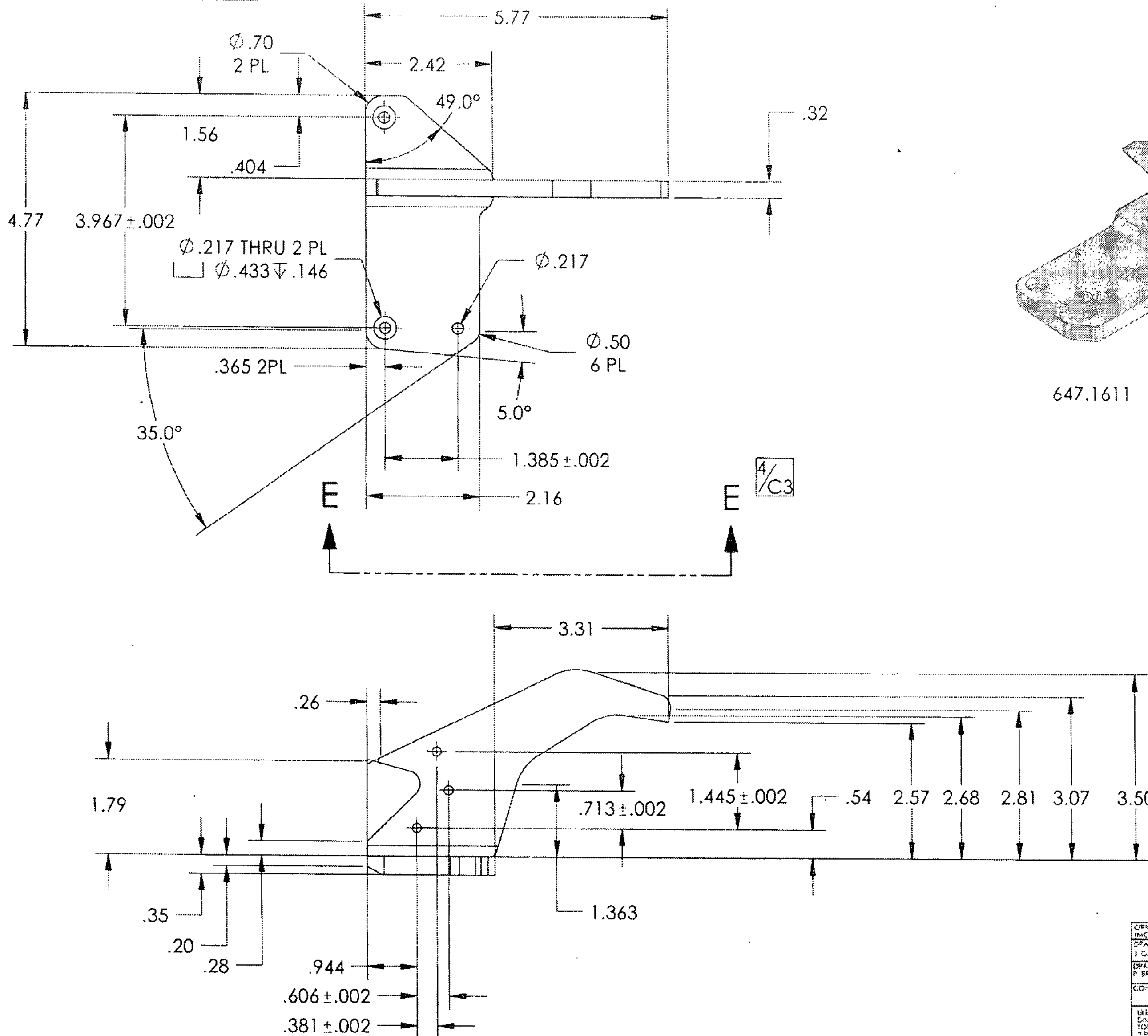

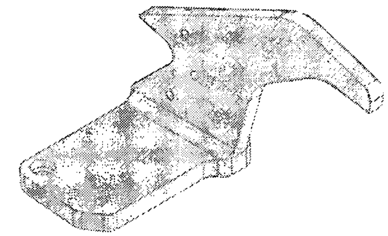

647.1611

ORIGINAL DATE	**APICAL INDUSTRIES** 2608 TEMPLE HEIGHTS DR. OCEANSIDE, CA. 92056-3512 (760)724-5300
DRAWN BY / CHECKED R. BRAVO	
DRAWING APPROVAL R. BRAVO	
CONTRACT No.	WIPER DEFLECTOR ASSY
UNLESS OTHERWISE SPECIFIED DIMENSIONS ARE IN INCHES TOLERANCES ARE: 2 PLACE DECIMALS ±.01 3 PLACE DECIMALS ±.005 ANGLES ± .5°	SIZE B · CAGE CODE 07MZ6 · DWG. NO 647.1600 · REV N/C
	SCALE: NONE · SHEET 3 OF 6

92599

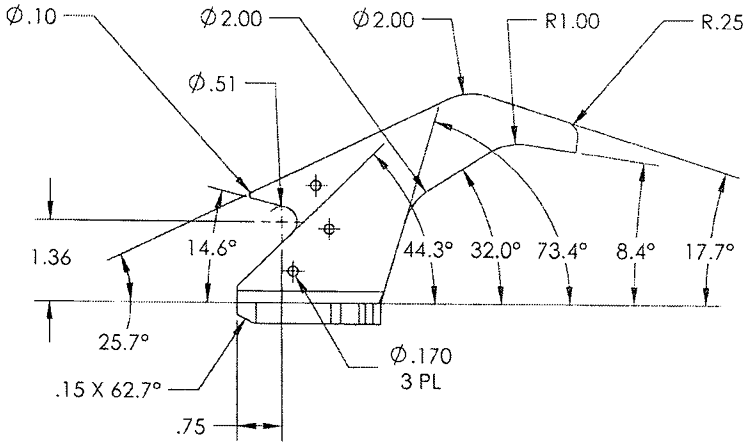

SECTION E-E 3/B4

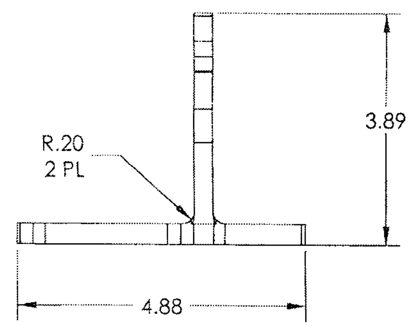

ORIGINAL DATE (MO-DA-YR) 06-10-09	**APICAL INDUSTRIES** 2608 TEMPLE HEIGHTS DR. OCEANSIDE, CA. 92056-3512 (760)724-5300
DRAWN BY J. GARDNER / CHECKER P. BRAVO	
DRAWING APPROVAL P. BRAVO	
CONTRACT NO.	WIPER DEFLECTOR ASSY
UNLESS OTHERWISE SPECIFIED DIMENSIONS ARE IN INCHES TOLERANCES ARE: 2 PLACE DECIMALS ± .01 3 PLACE DECIMALS ± .005 ANGLES ± .5°	SIZE B / CAGE CODE 07MZ6 / DWG. NO 647.1600 / REV. N/C
	SCALE: NONE / SHEET 4 OF 6

92599

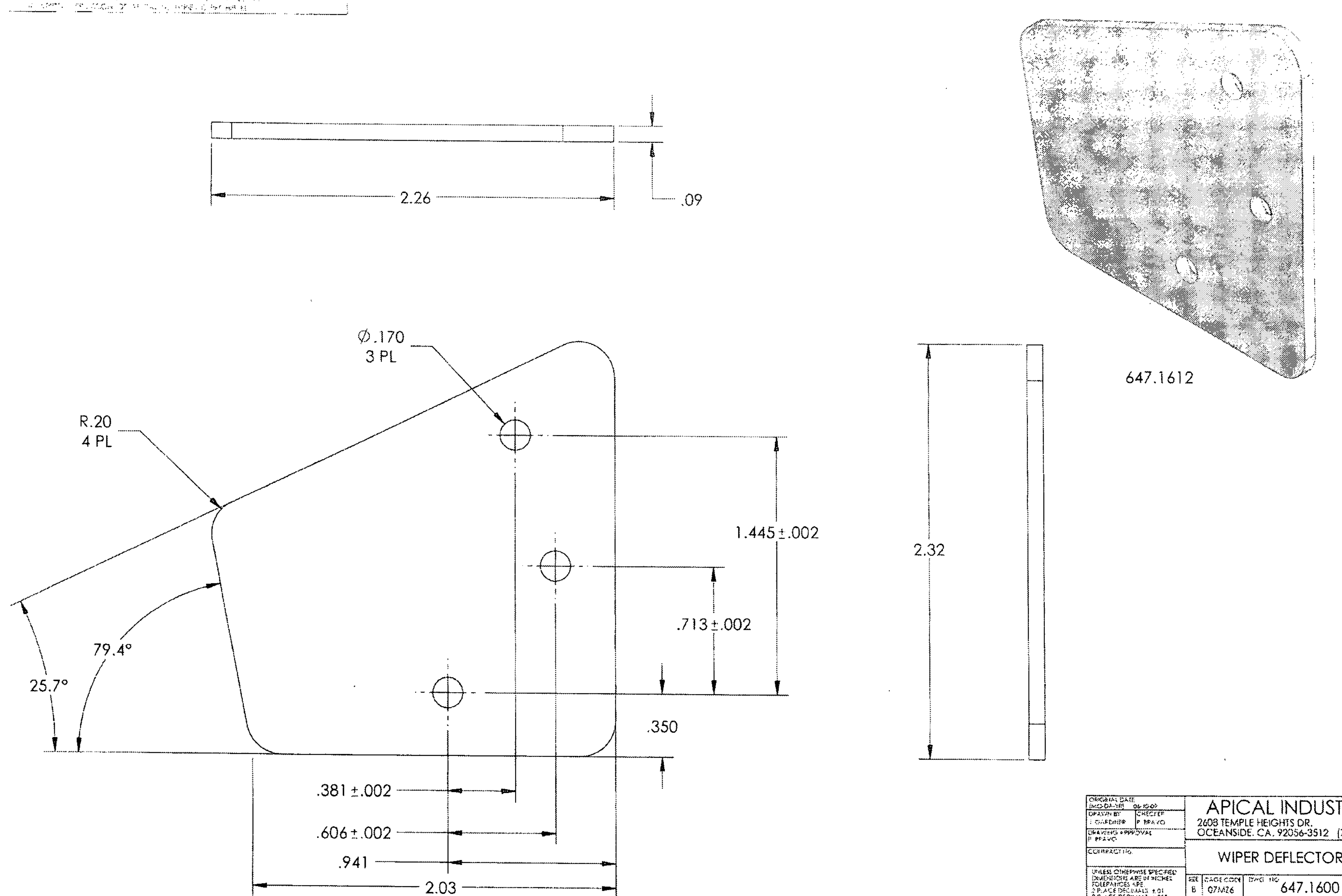

ORIGINAL DATE (MO-DA-YR) 06-10-09	**APICAL INDUSTRIES** 2608 TEMPLE HEIGHTS DR. OCEANSIDE, CA. 92056-3512 (760)724-5300
DRAWN BY J. GARDNER / CHECKED P. BRAVO	
DRAWING APPROVAL P. BRAVO	
CONTRACT NO.	WIPER DEFLECTOR ASSY
UNLESS OTHERWISE SPECIFIED DIMENSIONS ARE IN INCHES TOLERANCES ARE: 2 PLACE DECIMALS ±.01 3 PLACE DECIMALS ±.005 ANGLES ± .5°	SIZE B / CAGE CODE 07MZ6 / DWG NO 647.1600 / REV N/C
	SCALE: NONE / SHEET 5 OF 6

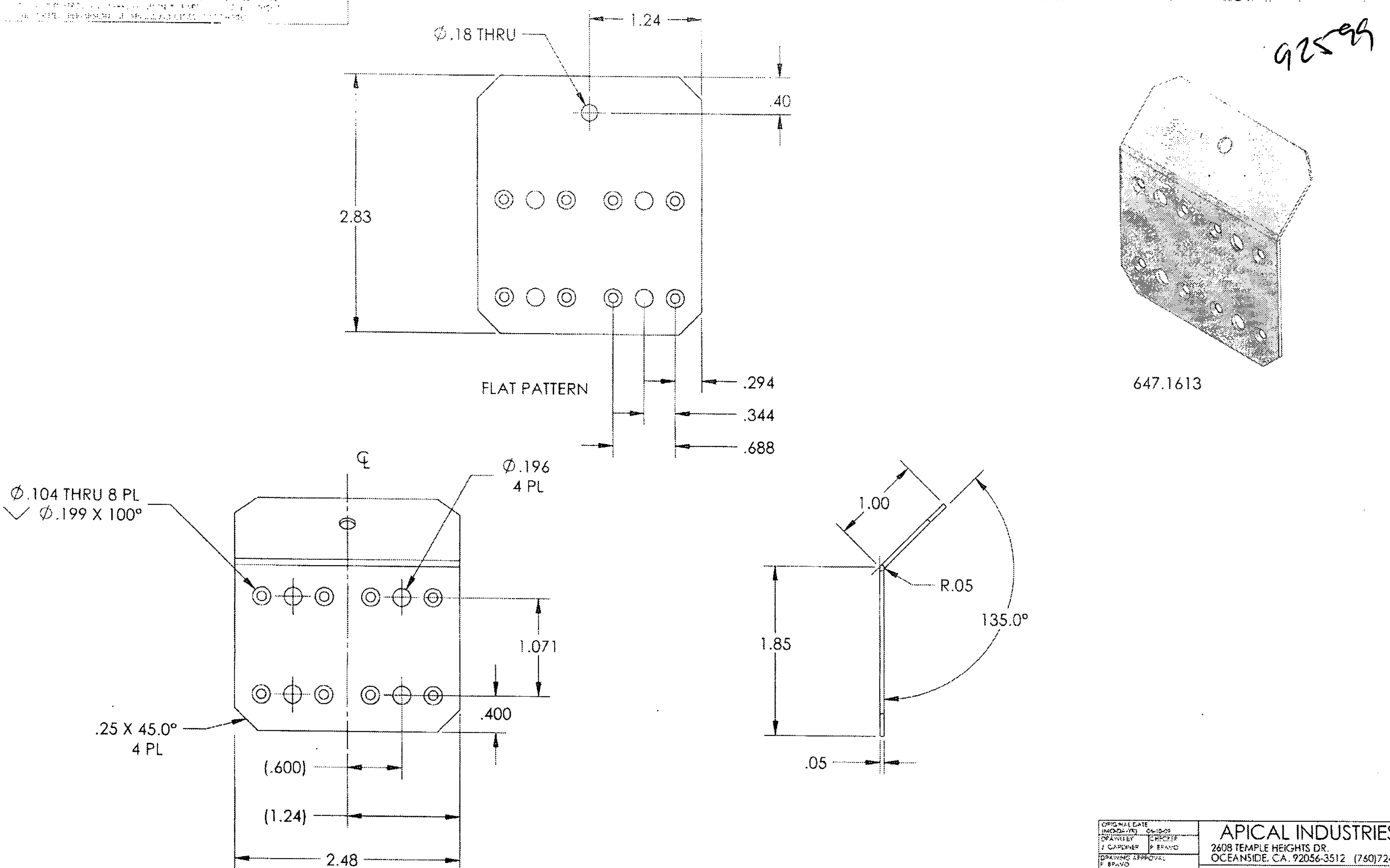

ORIGINAL DATE (MO-DA-YR) 05-10-09		**APICAL INDUSTRIES** 2608 TEMPLE HEIGHTS DR. OCEANSIDE, CA. 92056-3512 (760)724-5300
DRAWN BY J. GARDNER	CHECKER P. BRAVO	
DRAWING APPROVAL P. BRAVO		WIPER DEFLECTOR ASSY
CONTRACT No		
UNLESS OTHERWISE SPECIFIED DIMENSIONS ARE IN INCHES TOLERANCES ARE: 2 PLACE DECIMALS ±.01 3 PLACE DECIMALS ±.005 ANGLES ± .5°		SIZE B · CAGE CODE 07MZ6 · DWG. NO 647.1600 · REV N/C
		SCALE: NONE · SHEET 6 OF 6

A.T.G. Industries Inc.
731, rue Industrielle Rd.
PLATING DEPARTMENT
Rockland, On K4K 1T2
Canada
Ph: (613) 446-4544
Fax: (613) 446-4556

Pack List

Number: 62107 Date: 12-Dec-12

To

DART AEROSPACE LTD
1270 ABERDEEN ST.
HAWKESBURY, ON K6A 1K7
Canada

Ph: 613-632-5200 Fax: 613-632-1185

Ship To

DART AEROSPACE LTD
1270 ABERDEEN ST.
HAWKESBURY, ON K6A 1K7
Canada

Ph: 613-632-5200 Fax: 613-632-1185

Terms	Ship Via

Quantity	Description
1 lot	Part: ASST Rev: 8 PCS 647.1610 5 PCS 647.1612 2 PCS 647.1713 6 PCS 647.1811 1 PC 647.1816 1 PC 647.1817 8 PCS 647.1818 11 PCS 646.3210 20 PCS 646.3313 10 PCS 646.3717 20 PCS 646.3717 16 PCS 647.4610 10 PCS 649.4811 10 PCS 649.4812 24 PCS 649.4814 30 PCS 649.4815 6 PCS 647.7913 3 PCS 647.7919 10 PCS 647.9010 10 PCS 647.9011 15 PCS 647.9012 40 PCS 647.9013 60 PCS 646.9710 HARD ANODIZE BLACK MIL-A-8625 TYPE III CLASS 2 Job: 20120768 PO: PO18506 Line:

Certificate of Conformance

A.T.G. Industries certifies that all items in this shipment are in conformance with all requirements, specifications and drawings referenced in the purchase order.

ISO 9001 : 2008 REGISTERED
ATG SALES-2010 TERMS APPLY

DATE : 12/12/12

A.T.G. Industries Inc.
731, rue Industrielle Rd.
PLATING DEPARTMENT
Rockland, On K4K 1T2
Canada
Ph: (613) 446-4544
Fax: (613) 446-4556

Pack List

Number: 62107 Date: 12-Dec-12

To

DART AEROSPACE LTD
1270 ABERDEEN ST.
HAWKESBURY, ON K6A 1K7
Canada

Ph: 613-632-5200 Fax: 613-632-1185

Ship To

DART AEROSPACE LTD
1270 ABERDEEN ST.
HAWKESBURY, ON K6A 1K7
Canada

Ph: 613-632-5200 Fax: 613-632-1185

Terms	Ship Via

Quantity	Description
	CERTIFIED SIGNATURE :
	RECEIVER SIGNATURE :